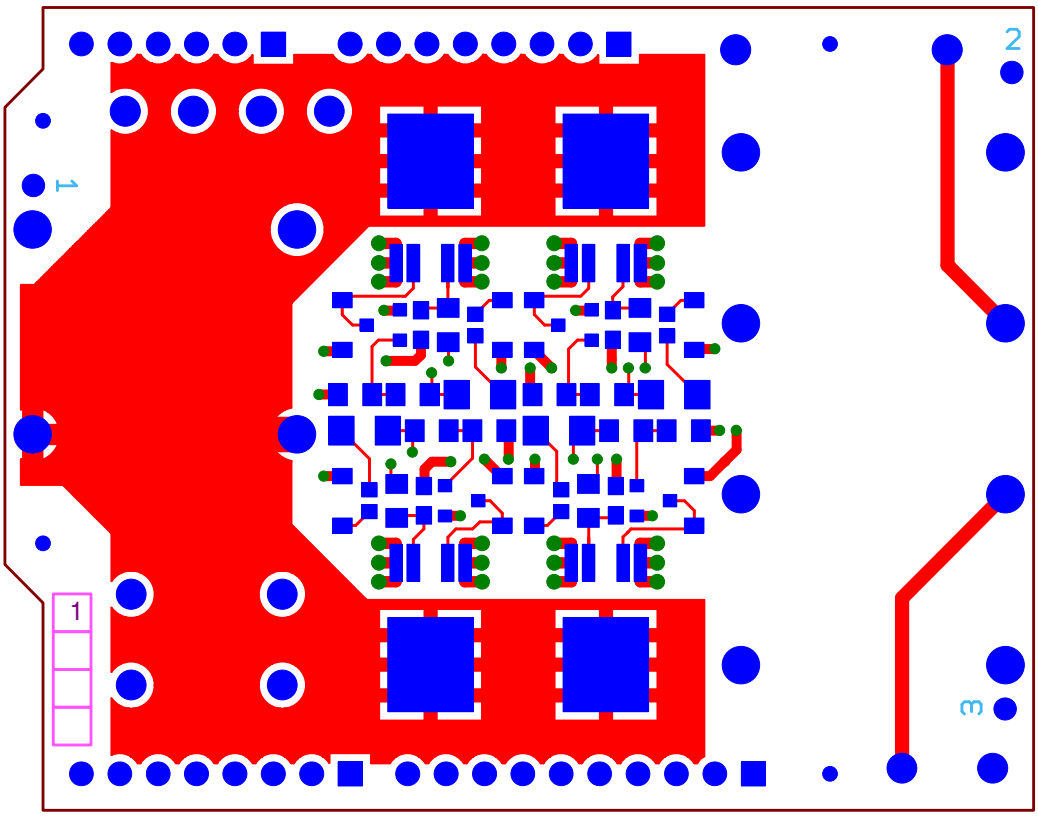
1
2
3
1